Work Order ID 71536

Wednesday, July 06, 2011 11:27:18 AM

Item ID: D4072-3 **Accept** **Setup Start**

Revision ID: **Stop**

Item Name: Airframe Hinge Backing Plate

Start Date: 7/6/2011 **Start Qty:** 12.00 **Cust Item ID:**

Required Date: 7/20/2011 **Req'd Qty:** 12.00 **Customer:**

Reference:

Run Start

Approvals: **Process Plan:** CL **Date:** 11/07/06 **Tooling:** _____ **Date:** _____

Stop

QC: _____ **Date:** _____ **SPC (Y/N):** _____ **Date:** _____

Sequence ID/ Work Center ID	Operation Description	Set Up/ Run Hours	Tool ID	Tool #	Plan Code	Accept Qty	Reject Qty	Reject Number	Insp. Stamp
Draw Nbr / **Revision Nbr**									
D4072 / B									
100		0.00							
Waterjet	**Memo**	0.00				BH-7-14			
FLOW CNC Waterjet	1-Cut as per Dwg Dwg Rev: B Prog Rev: B							24	
6061 . 063									
	2-Deburr if necessary								
110	QC2- Inspect parts off machine FAI/FAIB	0.00							
QC	**Memo**	0.00				BH-7-14			
Quality Control									

Dart Aerospace Ltd

W/O:		WORK ORDER CHANGES					
DATE	STEP	PROCEDURE CHANGE	By	Date	Qty	Approval Chief Eng / Prod Mgr	Approval QC Inspector

Part No: _____ **PAR #:** _____ **Fault Category:** _____ **NCR:** Yes No **DQA:** _____ **Date:** _____

Resolution: _____ **Disposition:** _____ **QA: N/C Closed:** _____ **Date:** _____

NCR:		WORK ORDER NON-CONFORMANCE (NCR)						
DATE	STEP	Description of NC Section A	Corrective Action Section B			Verification Section C	Approval Chief Eng	Approval QC Inspector
			Initial Chief Eng	Action Description Chief Eng	Sign & Date			

NOTE: Date & initial all entries

H:\fFORMS\Quality Assurance\approved QA\NCRWO RevE

Work Order ID 71536

Wednesday, July 06, 2011 11:27:18 AM

Item ID: D4072-3 **Accept** **Setup Start**

Revision ID: **Stop**

Item Name: Airframe Hinge Backing Plate

Start Date: 7/6/2011 **Start Qty:** 12.00 **Cust Item ID:**

Required Date: 7/20/2011 **Req'd Qty:** 12.00 **Customer:**

Reference:

Run Start

Approvals: **Process Plan:** _____ **Date:** _____ **Tooling:** _____ **Date:** _____

Stop

QC: _____ **Date:** _____ **SPC (Y/N):** _____ **Date:** _____

Sequence ID/ Work Center ID	Operation Description	Set Up/ Run Hours	Tool ID	Tool #	Plan Code	Accept Qty	Reject Qty	Reject Number	Insp. Stamp
120	QC8- Inspect parts - second check	0.00				counted x24			
QC	Memo	0.00							
Quality Control									
130	Chemical Conversion Coat per QSI005 4.1	0.00				24	BK 11-7-18.		
HandFinish	Memo	0.00							
Hand Finishing									
140	White Gloss(Ref:4.3.5.1) per QSI005 4.3-Alum	0.00				24	BK 11-7-18		
Powdercoat	M 117745								
Powder Coating	Memo	0.00							

POWDER COAT:
Start Time: 12.00
Oven Temperature: 520°
Finish Time: 12.30

Dart Aerospace Ltd

W/O:		WORK ORDER CHANGES					
DATE	STEP	PROCEDURE CHANGE	By	Date	Qty	Approval Chief Eng / Prod Mgr	Approval QC Inspector

Part No: _____ **PAR #:** _____ **Fault Category:** _____ **NCR:** Yes No **DQA:** _____ **Date:** _____

Resolution: _____ **Disposition:** _____ **QA: N/C Closed:** _____ **Date:** _____

NCR:		WORK ORDER NON-CONFORMANCE (NCR)						
DATE	STEP	Description of NC Section A	Corrective Action Section B			Verification Section C	Approval Chief Eng	Approval QC Inspector
			Initial Chief Eng	Action Description Chief Eng	Sign & Date			

NOTE: Date & initial all entries

H:\FORMS\Quality Assurance\approved QA\NCRWO RevE

Work Order ID 71536

Wednesday, July 06, 2011 11:27:18 AM

Item ID: D4072-3 **Accept** **Setup Start**

Revision ID: **Stop**

Item Name: Airframe Hinge Backing Plate

Start Date: 7/6/2011 **Start Qty:** 12.00 **Cust Item ID:**

Required Date: 7/20/2011 **Req'd Qty:** 12.00 **Customer:**

Reference:

Run Start

Approvals: **Process Plan:** _____ **Date:** _____ **Tooling:** _____ **Date:** _____

Stop

QC: _____ **Date:** _____ **SPC (Y/N):** _____ **Date:** _____

Sequence ID/ Work Center ID	Operation Description	Set Up/ Run Hours	Tool ID	Tool #	Plan Code	Accept Qty	Reject Qty	Reject Number	Insp. Stamp
150	QC3- Inspect Part Finish	0.00							
QC	Memo	0.00							
Quality Control									
160	Identify as per dwg & Stock Location: 119	0.00							
Packaging	Memo	0.00							
Packaging									
170	QC21- Final Inspection - Work Order Release	0.00							
QC	Memo	0.00							
Quality Control									

11/07/18

11/7/19 24

11/7/19

11-07-19

Dart Aerospace Ltd

W/O:		WORK ORDER CHANGES					
DATE	STEP	PROCEDURE CHANGE	By	Date	Qty	Approval Chief Eng / Prod Mgr	Approval QC Inspector

Part No: _____ PAR #: _____ Fault Category: _____ NCR: Yes No DQA: _____ Date: _____

Resolution: _____ Disposition: _____ QA: N/C Closed: _____ Date: _____

NCR:		WORK ORDER NON-CONFORMANCE (NCR)						
DATE	STEP	Description of NC Section A	Corrective Action Section B			Verification Section C	Approval Chief Eng	Approval QC Inspector
			Initial Chief Eng	Action Description Chief Eng	Sign & Date			

NOTE: Date & initial all entries

H:\fFORMS\Quality Assurance\approved QA\NCRWO RevE

Picklist Print

Wednesday, July 06, 2011 11:27:15 AM

Work Order ID: 71536

Parent Item: D4072-3

Parent Item Name: Airframe Hinge Backing Plate

Start Date: 7/6/2011 **Required Date:** 7/20/2011

Start Qty: 12.00 **Required Qty:** 12.00

Comments: IPP Rev:A 10.06.08 new issue DD verf:EC IPP REV:B
DRAWING REV. CHANGE AS PER ECN 11-598 11-07-05 JFS
VERIFIED BY:

Component Item ID/ Item Name	Replacement Item ID	Mfg/ Purch	Bin Item	Primary Location	Last Location	Route Seq ID	Unit of Measure	Qty on Hand	Qty per Kit	Total Qty	Qty Issued	Date Issued	Status
M6061T6S.063 6061-T6 .063 Sheet		Purchased	No			100	sf	212.9456	0.0087	0.109895	.5	B11-7-14	

Location	Loc Qty	Loc Code
MAT021	212.9455684	
116308	28.4755684	
117285	184.47	

116308

24

Dart Aerospace Ltd

W/O:		WORK ORDER CHANGES					
DATE	STEP	PROCEDURE CHANGE	By	Date	Qty	Approval Chief Eng / Prod Mgr	Approval QC Inspector

Part No: _____ **PAR #:** _____ **Fault Category:** _____ **NCR:** Yes No **DQA:** _____ **Date:** _____

Resolution: _____ **Disposition:** _____ **QA: N/C Closed:** _____ **Date:** _____

NCR:		WORK ORDER NON-CONFORMANCE (NCR)						
DATE	STEP	Description of NC Section A	Corrective Action Section B			Verification Section C	Approval Chief Eng	Approval QC Inspector
			Initial Chief Eng	Action Description Chief Eng	Sign & Date			

NOTE: Date & initial all entries

H:\fFORMS\Quality Assurance\approved QA\NCRWO RevE

DART AEROSPACE LTD	Work Order:	71536
Description: Airframe Hinge Backing Plate	Part Number:	D4072-3
Inspection Dwg: D4072 Rev: A		Page 1 of 1

FIRST ARTICLE INSPECTION CHECKLIST

Drawing Dimension	Tolerance	Actual Dimension	Accept	Reject	Method of Inspection	Comments
Ø0.203	+0.005/-0.001	.205	✓		V PBC2	
2.00	+/-0.010	2.005	✓		V	
0.63	+/-0.030	.627	✓		V	
0.45	+/-0.030	.453	✓		V	
0.31	+/-0.030	.314	✓		V	
1.100	+/-0.010	1.100	✓		V	
0.063	+/-0.010	.065	✓		V	

Measured by:	RB	Audited by:	S	Preliminary Approval:	
Date:	11-7-14	Date:	16/07/14	Date:	

Rev	Date	Change	Revised by	Approved
A	10.10.25	New Issue	KJ	

SHOP COPY
RETURN TO
ENGINEERING
UNCONTROLLED COPY
SUBJECT TO AMENDMENT
WITHOUT NOTICE
WORK ORDER
NO. 71536
CL 11/07/06

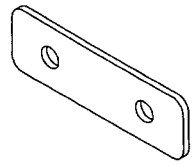

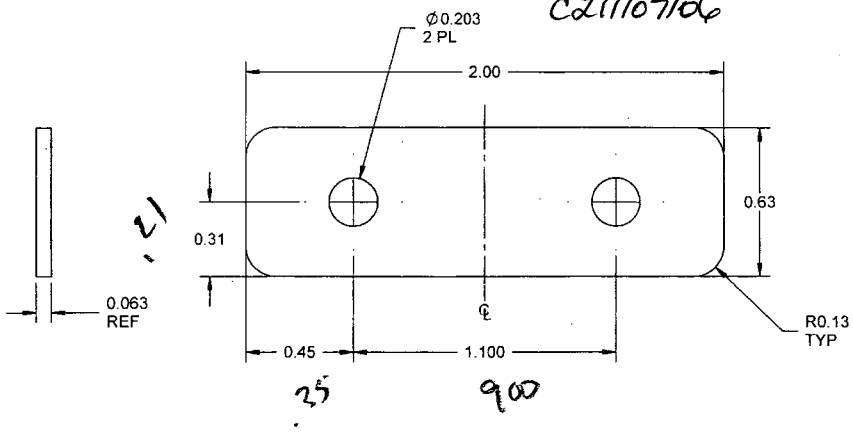

D4072-3 AIRFRAME HINGE BACKING PLATE

RELEASED
2011-06-30

NOTES:
1) MATERIAL: 6061-T6/T62 ALUMINUM SHEET, 0.063 THICK
PER QQ-A-250/11 OR AMS-QQ-A-250/11
OR AMS 4025 OR AMS 4027
OR ASTM B209
REF DART SPEC M6061T6S.063
2) FINISH: CHEMICAL CONVERSION COAT PER DART QSI 005 4.1
POWDER COAT "WHITE" (4.3.5.1) PER DART QSI 005 4.3
3) TOLERANCES: PER DART QSI 018 UNLESS OTHERWISE NOTED
4) UNITS: INCHES UNLESS OTHERWISE NOTED
5) BREAK SHARP EDGES: 0.005 TO 0.010 MAX
6) IDENTIFICATION: PER QSI 044 6.1
7) WEIGHT: 0.01 lbs

DESIGN		DART AEROSPACE USA, INC. PORT HADLOCK, WA
DRAWN	RF	
CHECKED		DRAWING NO. D4072 — REV. B — SHEET 2 OF 3
MFG. APPR.		
APPROVED		TITLE: AIRFRAME HINGE — SCALE: NTS
DE APPR.		
DATE	10.11.02	